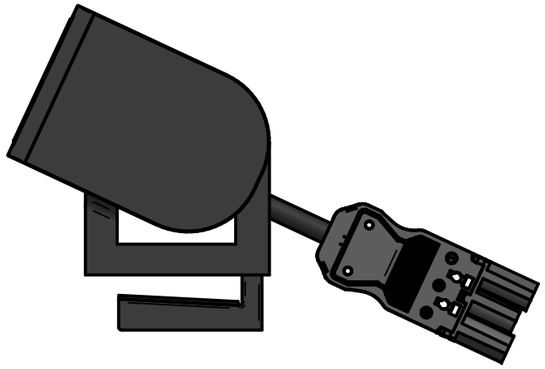

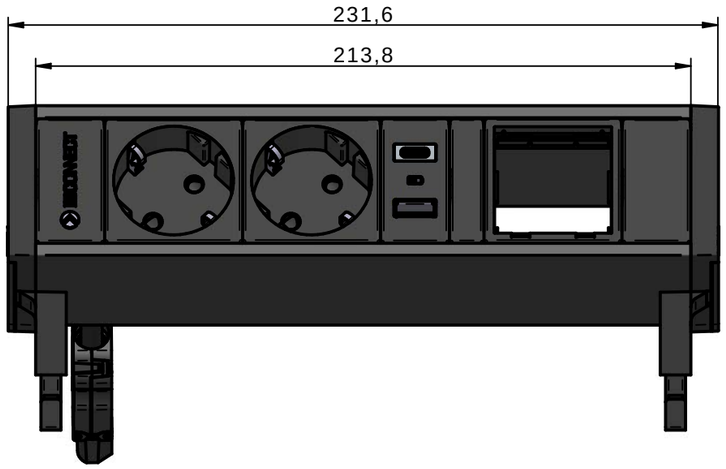

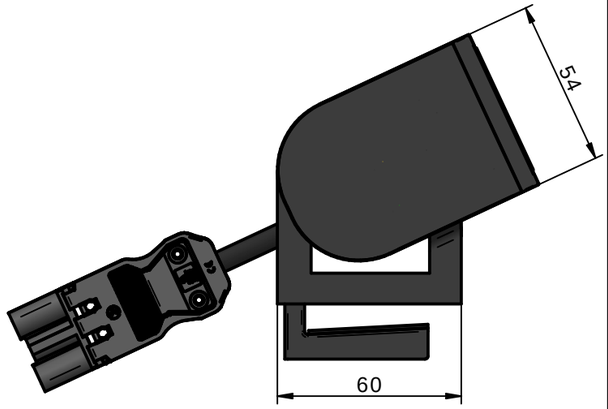

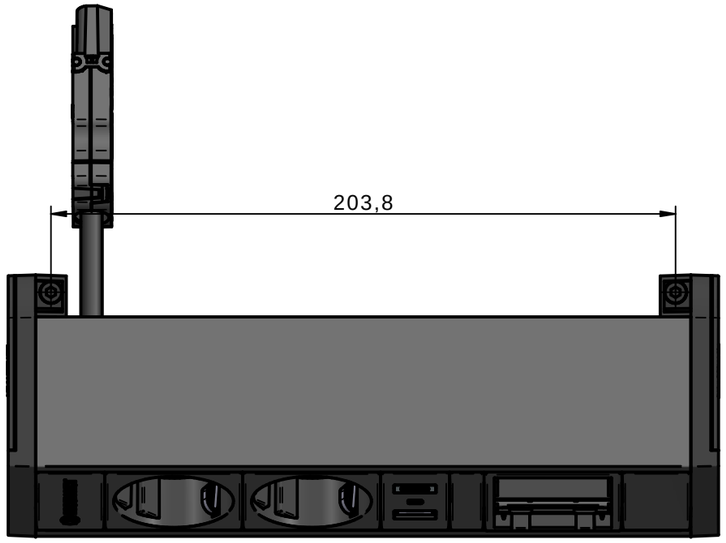

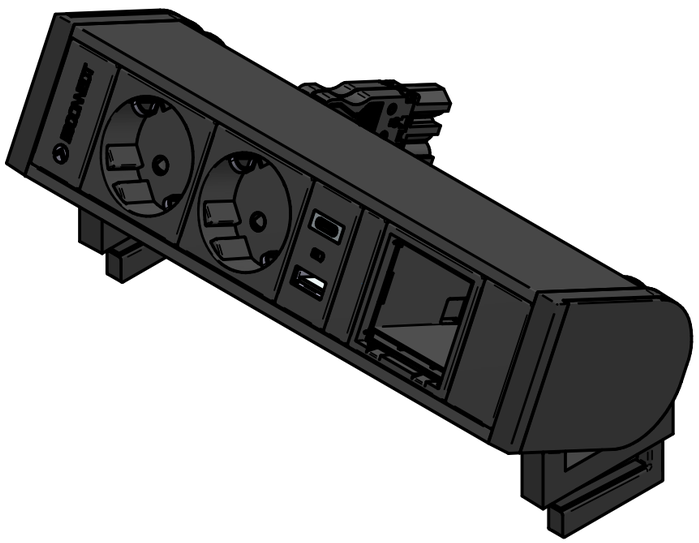

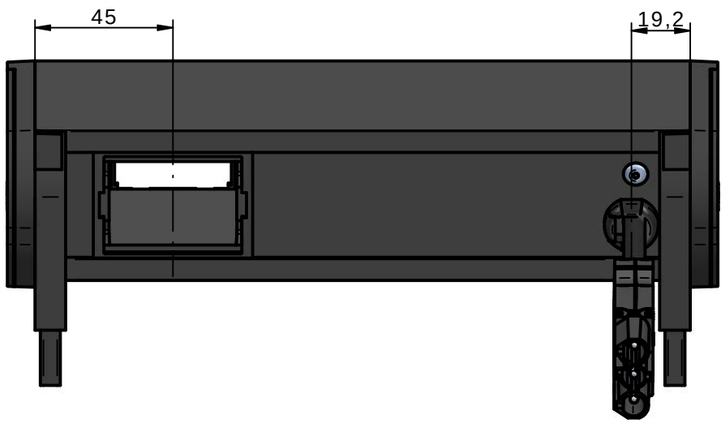

GENERAL TOLERANCES - DIN-7168 - (mm)					
FINISHING MEDIUM GRADE	> 6	6 > 30	30 > 100	100 > 300	300 > 1000
	± 0,1	± 0,2	± 0,3	± 0,5	± 0,8

IBCONNECT

IBCONNECT

Pol. Ind. El Escopar, Nº 5 - 31350 - Peralta (Navarra) - España / Tel. : 948 753 282 / Fax : 948 751 462
e-mail : comercial@ib-connect.com / export@ib-connect.com

Created	*OT. Cebb-Cableados*		Notes
Date	*4 - 04 - 2025*	Revisión nº	
Checked			

SCALE	*1:2*
DRAWING Nº.: 20103047-3	
File N.: 20103047-3 - SUPRA-2TSN+1AC-USBC+1MOD.dft	

20103047-3 SUPRA-2TSN+1AC-USBC+1MOD.dft