BOX / CUBOBOX

Document type: Datasheet	
Product: Box / Box Plus / Cubobox	References: 44XXXXXX-X / 32XXXXXX-X / 34XXXXXX-X
Made: R&D Department	Version: 3.0



DESCRIPTION

- Box and Box Plus are made of two elements:
  - Box/Box Plus: metal structure that is embedded in the table.
  - Cubobox: Electrification kit designed to be installed inside the metal structure, fixed to its cover.
- Box/Box Plus structure is made of painted steel and Cubobox structure is formed by lacquered aluminum profile with fixing plates.
- Cubobox profile design is prepared for the installation of 45x45mm mechanisms by direct clipping. Tool is needed for disassembly.
- Power supply is done from the rear of the profile, using a direct cable with a rapid connector (GST18 compatible).
- Voice, data and multimedia connections input is done from the rear of the profile with specific direct access.
- Kit is supplied with the configuration determined in each case, with electrical elements fully wired and assembled.
- Box is available in 3 measures: 3, 4 or 6 useful elements; Box Plus is available in 4 useful elements; Cubobox is available also in 3, 4 or 6 modules.
- Box Plus incorporates a 1 mm recess in the cover to integrate the material of the table.
- Box and Box Plus can be installed directly on tables between 20 and 40mm thick.

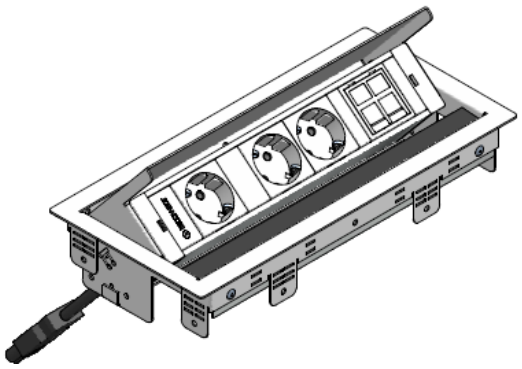

CHARACTERISTICS

Power supply	Through direct cable with rapid connector (GST18 compatible).
Internal wiring	Halogen free unipolar cable with 2,5mm² section.
Power, voice, data and multimedia supply	From the rear of the profile.
Voice, data and multimedia cable input	Through rear direct access.
Electromagnetic immunity	Installation of metal partition for shielding.
Grounding	Ground connection.

APPLICATIONS

- Operational office furniture.
- Audiovisual and meeting tables.
- Libraries.
- Hotel furniture.

TECHNICAL INFORMATION

Impact resistance	0,5 J
Minimum temperature for storage and transport	-5 °C
Minimum temperature for installation and use	-5 °C
Maximum temperature for use	60 °C
Resistance to flame spread	No flame propagator
Electrical continuity	With electrical continuity
Electrical insulation	With electrical insulation
Case protection degree	IP4X
Protection against corrosive or polluting substances	With low interior and exterior protection
Cover retention for system access	Can only be opened with a tool
Operating current and voltage	16 A / 230 V
Safety	Protection elements can be integrated

NORMATIVE

CE	Box / Box Plus / Cubobox meet the essential requirements and compliance with the Council Directives of Low Voltage 2014/35/EU according to normative EN 50085-1: Cable trunking systems and cable ducting systems for electrical installations.
REACH	Box / Box Plus / Cubobox do not incorporate any of the substances specified in ECHA's list of extremely worrying substances (SVHC) and therefore complies with the requirements of the regulation: 1907/2006/CE (REACH).
RoHS	Box / Box Plus / Cubobox meet the essential requirements of the directive for Restriction of Hazardous Substances: 2002/95/CE (RoHS).
IEC 61535	The rapid connectors used for electrical supply of Box / Box Plus / Cubobox are designed and manufactured conforming to the requirements in the standard UNE-EN IEC 61535, transposition of the international standard IEC 61535: Installation intended for permanent connection couplers in fixed installations.

MATERIALS AND FINISHES

Cubobox profile	Aluminum	Black lacquered (RAL 9011). White lacquered (RAL 9010).
Cubobox profile covers	Polycarbonate	Grey (RAL 7016). White (RAL 9010).
Sockets	Polycarbonate	Grey (RAL 7016). White (RAL 9010). Red (RAL 3003).
Box	Steel	Grey (RAL 9006). White (RAL 9003). Black (RAL 9005).
Box Plus	Steel	Grey (RAL 9006). Black (RAL 9005).

DIMENSIONS & INSTALLATION

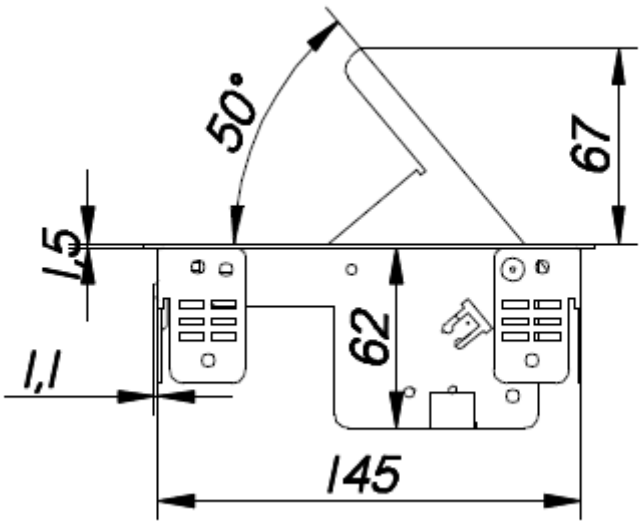

Cubobox fixation by clipping

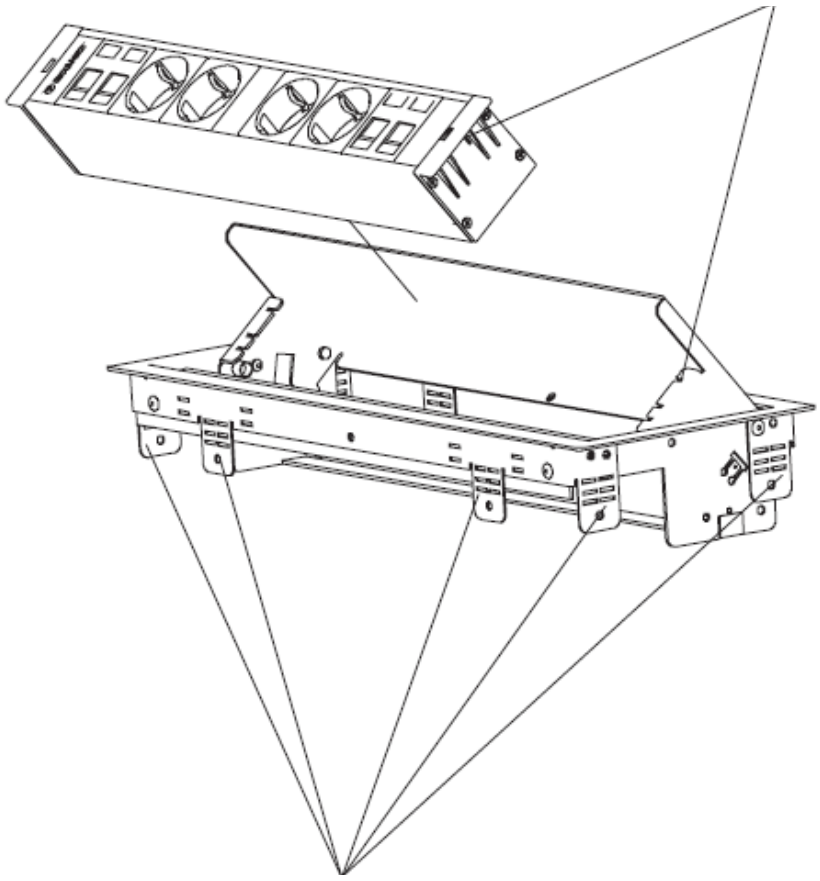

Table fixation system

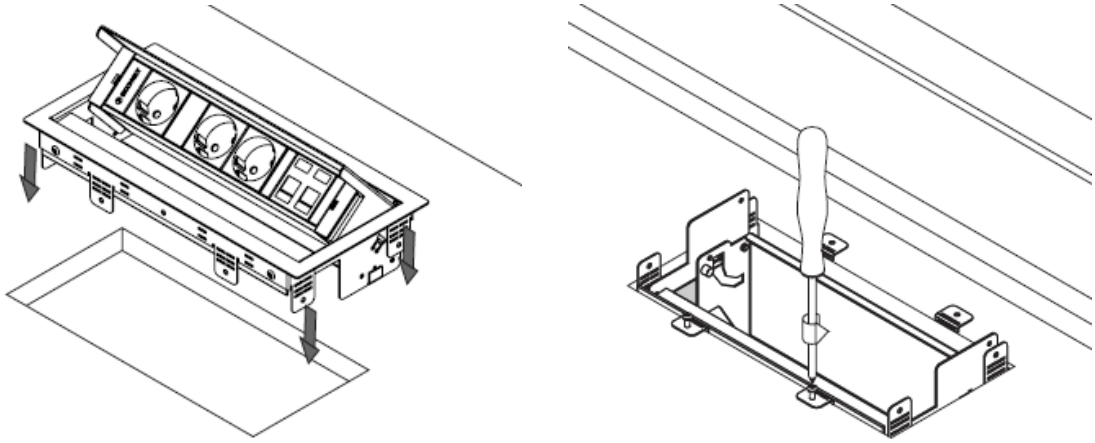

Area to incorporate table material (Box Plus)

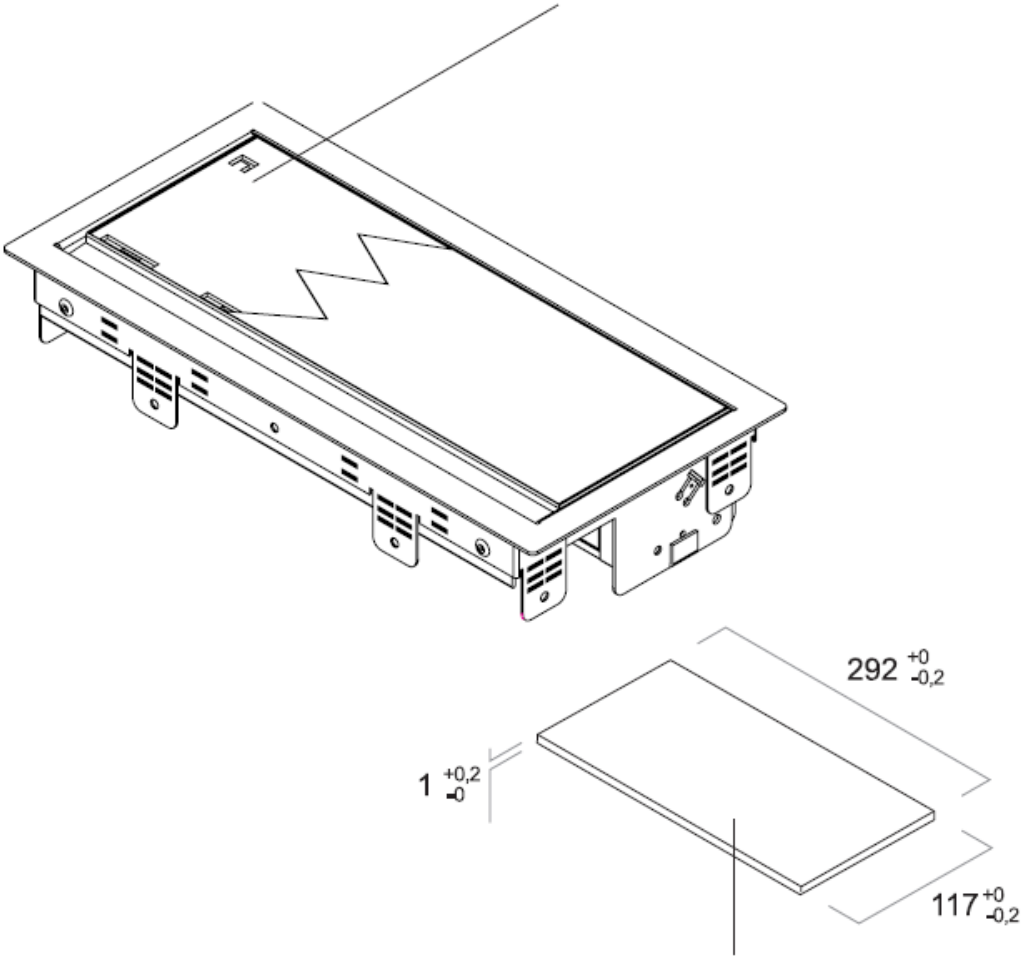

Measures of the material to add (Box Plus)

Box 3 elements specific measures (table cut 249 x 147mm)

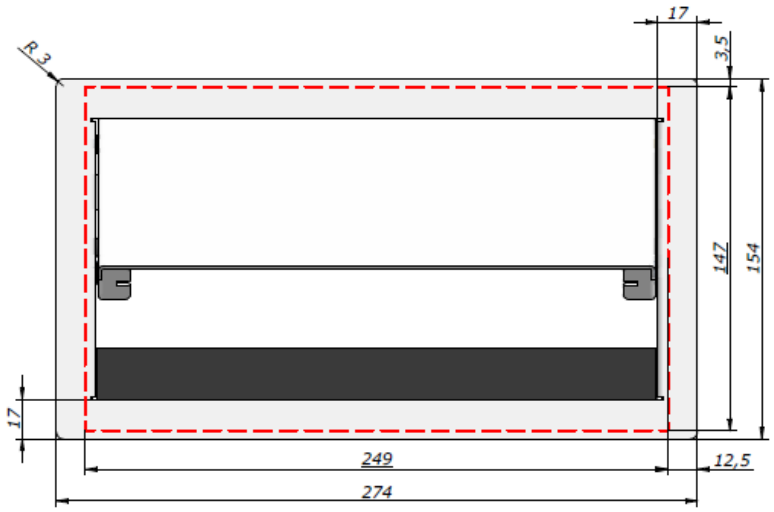

Box 4 elements / Box Plus specific measures (table cut 294 x 147mm)

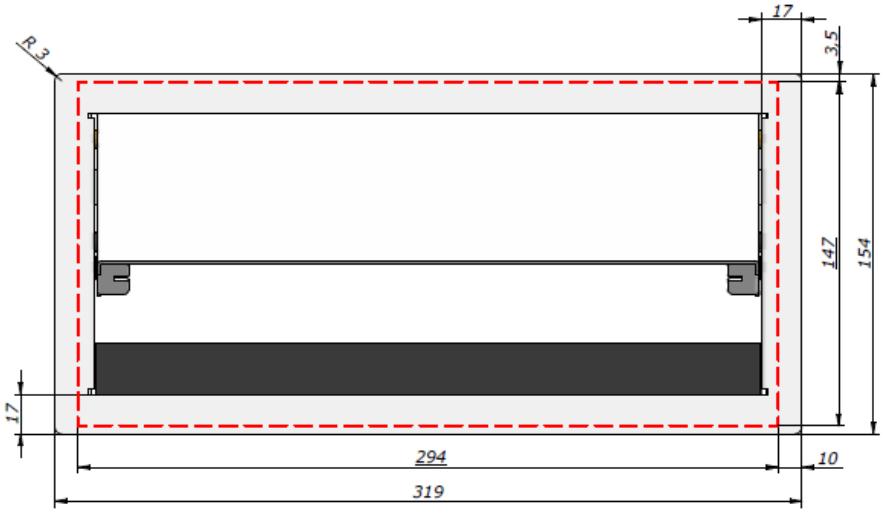

Box 6 elements specific measures (table cut 384 x 147mm)

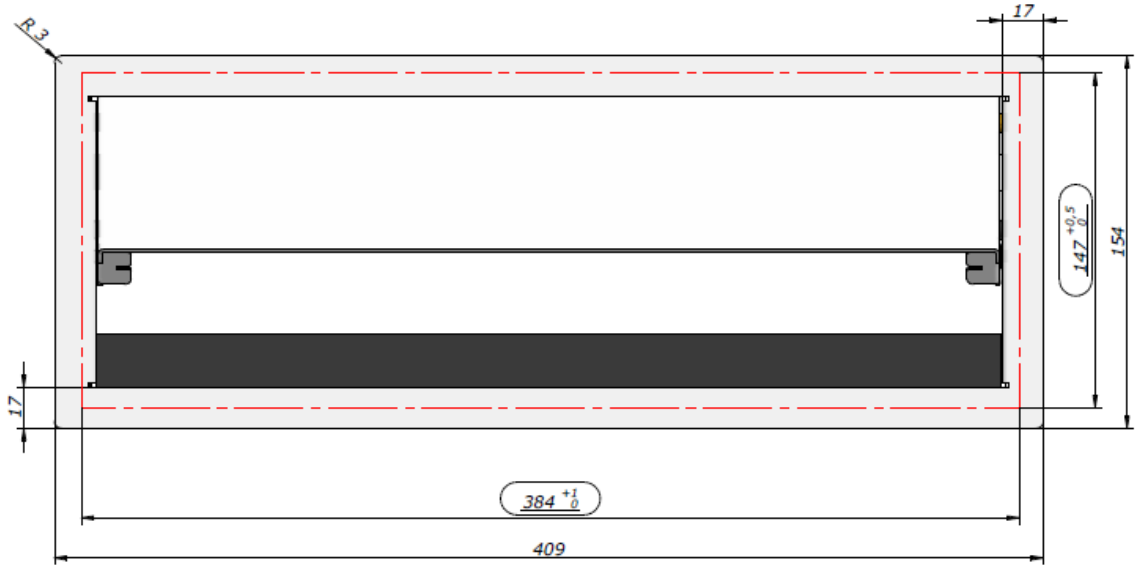

Cubobox - 3 elements

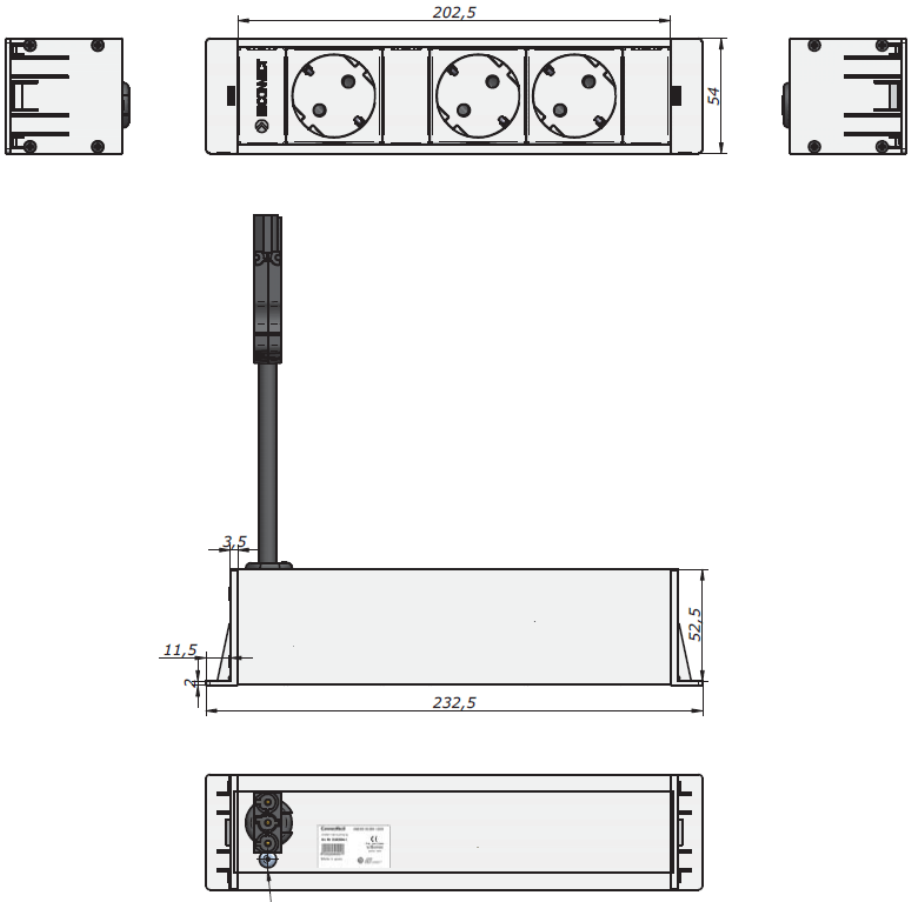

Cubobox4 - 4 elements

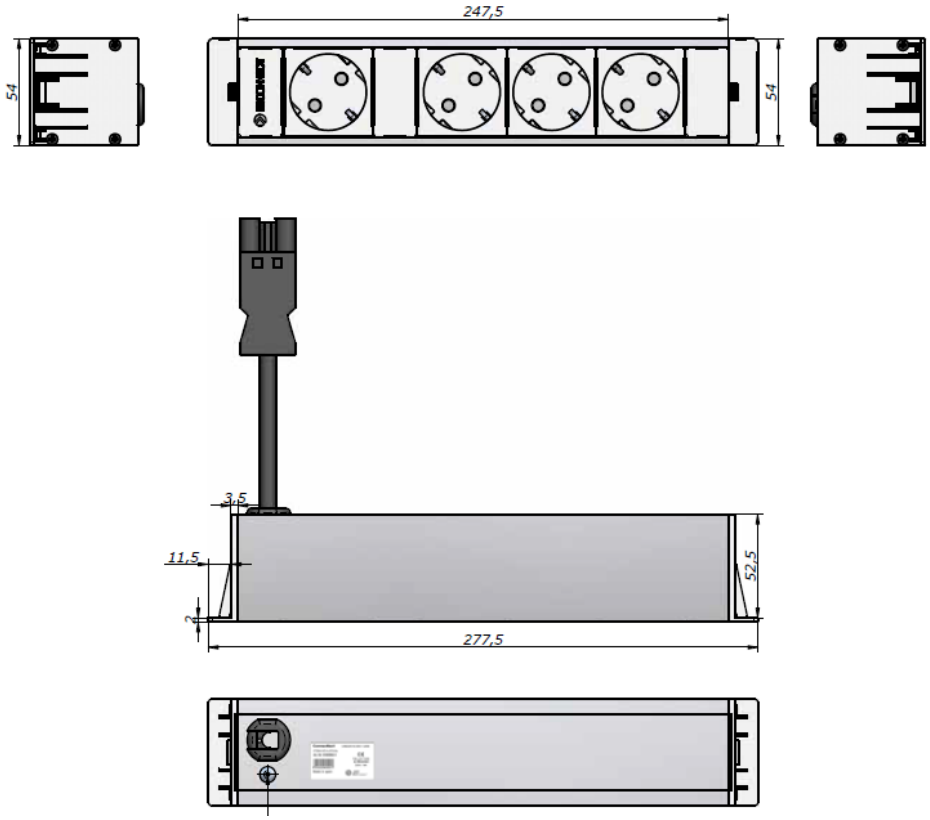

Cubobox6 - 6 elements

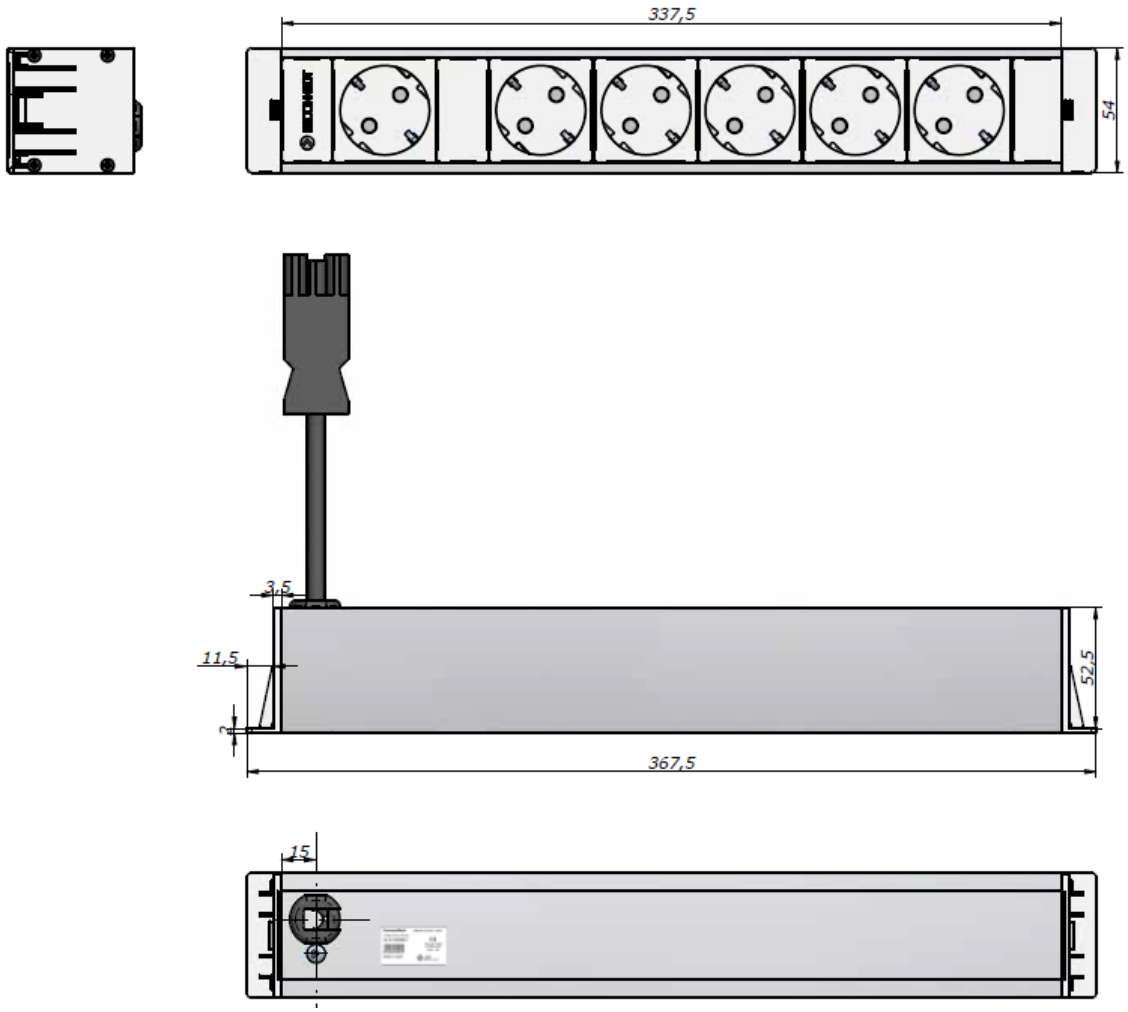

CONFIGURATION

Box/Box Plus is available with different color finishes:

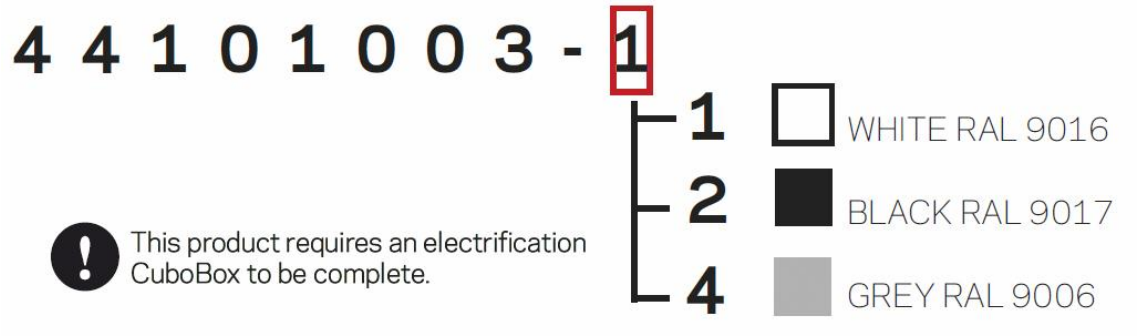

Cubobox is also available with different sockets and color finishes.

