DIVUS

Document type: Datasheet	
Product: Divus	References: 8010XXXX-X
Made: R&D Department	Version: 3.0



DESCRIPTION

- Electrification kit designed to installed embedded in different types of furniture.
- Its structure is formed by polyamide with fiberglass body, with a fixing system for tables between 16 and 40mm thick.
- Power supply is done from the rear of the product, using direct cable with a rapid connector (GST18 compatible)
- Kit is supplied with the configuration determined in each case, with electrical elements fully wired and assembled.





CHARACTERISTICS

Power supply	Through direct cable with rapid connector (GST18 compatible).
Internal wiring	Unipolar cable with 1,5mm² section.
Voice, data and multimedia supply	From the rear of the product.
Voice, data and multimedia cable input	Through rear direct access.
Grounding	Ground connection.

APPLICATIONS

- Offices.
- Meeting tables.
- Pods / Meeting booths.
- Libraries / Universities.
- Technical furniture.

TECHNICAL INFORMATION

Impact resistance	0,2 J
Minimum temperature for storage and transport	-5 °C
Minimum temperature for installation and use	-5 °C
Maximum temperature for use	60 °C
Resistance to flame spread	No flame propagator.
Electrical continuity	With electrical continuity.
Electrical insulation	With electrical insulation.
Case protection degree	IP4X
Protection against corrosive or polluting substances	With low interior and exterior protection.
Cover retention for system access	Can only be opened with a tool.
Operating current and voltage	16 A / 230 V

NORMATIVE

CE	Divus meets the essential requirements and compliance with the Council Directives of Low Voltage 2014/35/EU according to normative EN 50085-1: Cable trunking systems and cable ducting systems for electrical installations.
REACH	Divus does not incorporate any of the substances specified in ECHA's list of extremely worrying substances (SVHC) and therefore complies with the requirements of the regulation: 1907/2006/CE (REACH).
RoHS	Divus meets the essential requirements of the directive for Restriction of Hazardous Substances: 2002/95/CE (RoHS).
IEC 61535	The rapid connectors used for electrical supply of Divus are designed and manufactured conforming to the requirements in the standard UNE-EN IEC 61535, transposition of the international standard IEC 61535: Installation intended for permanent connection couplers in fixed installations.

MATERIALS AND FINISHES

Body	Polyamide with fiberglass	Black (RAL 9005)
Housing ring	Polycarbonate	Black (RAL 9005) White (RAL 9010)

DIMENSIONS

Divus Regular Charging

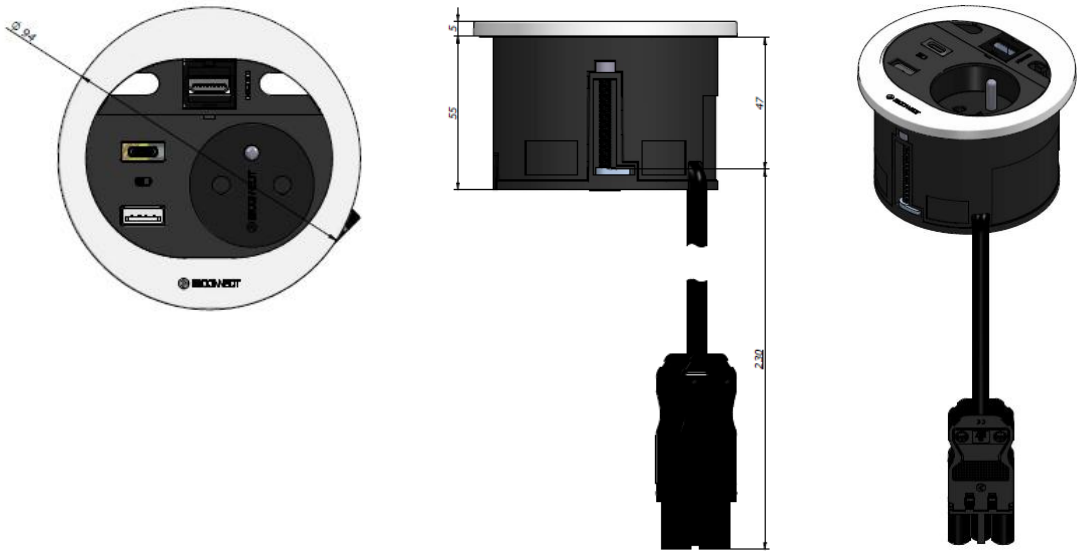

Divus Smart Charging

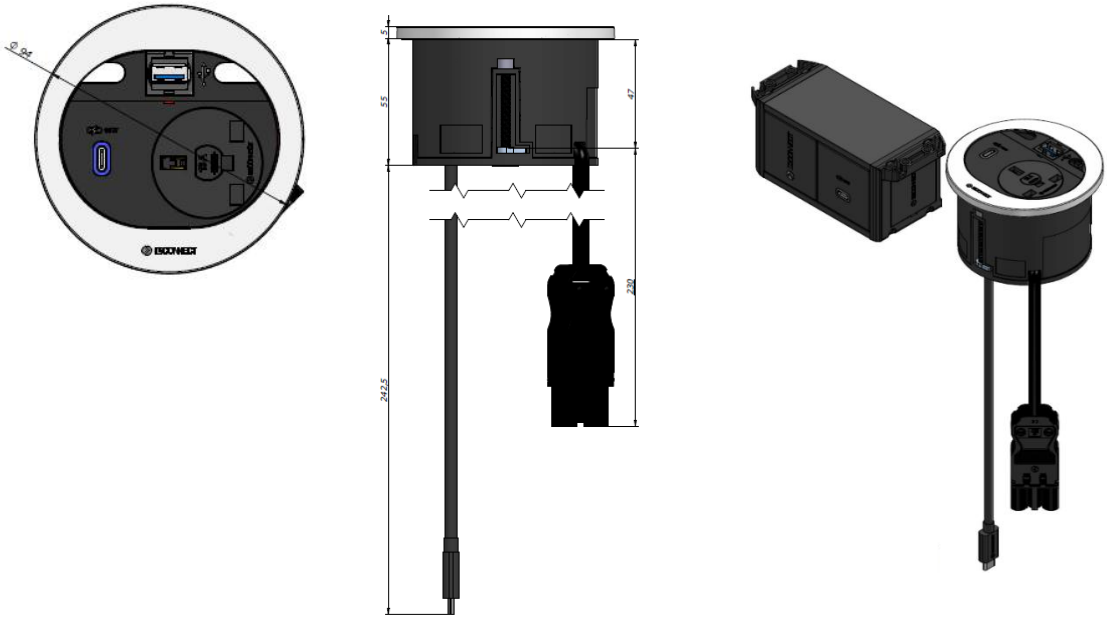

INSTALLATION

Divus Regular Charging

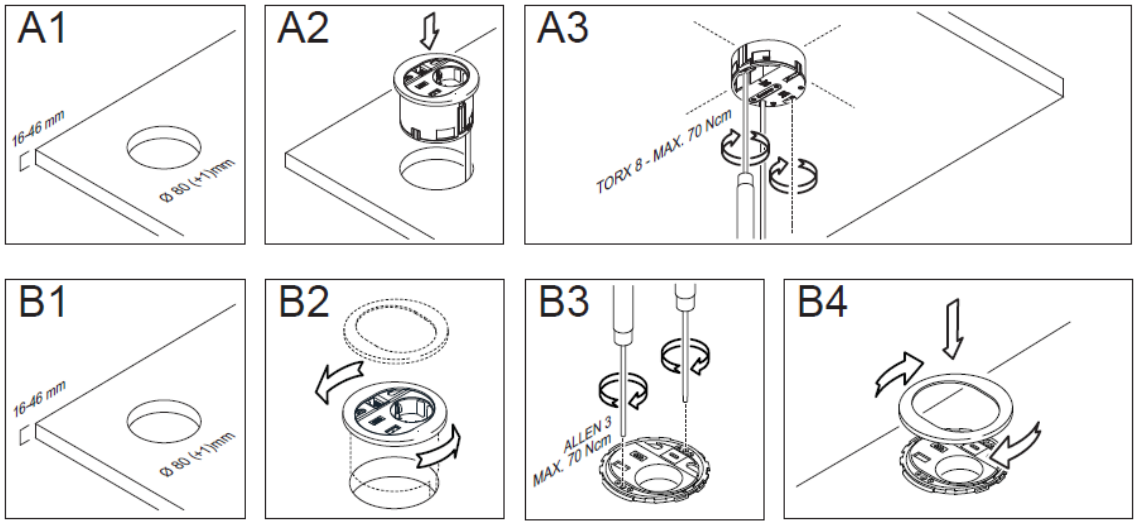

Divus Smart Charging

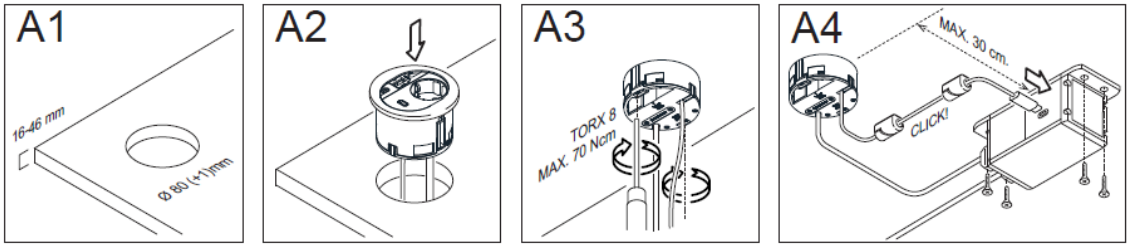

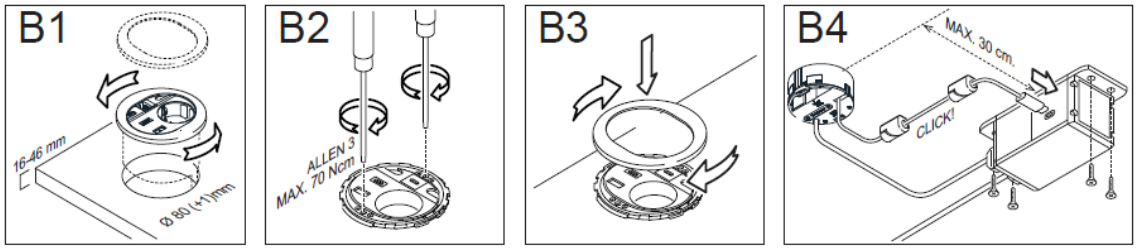

CONFIGURATION

Divus is available with different sockets and colour finishes.

